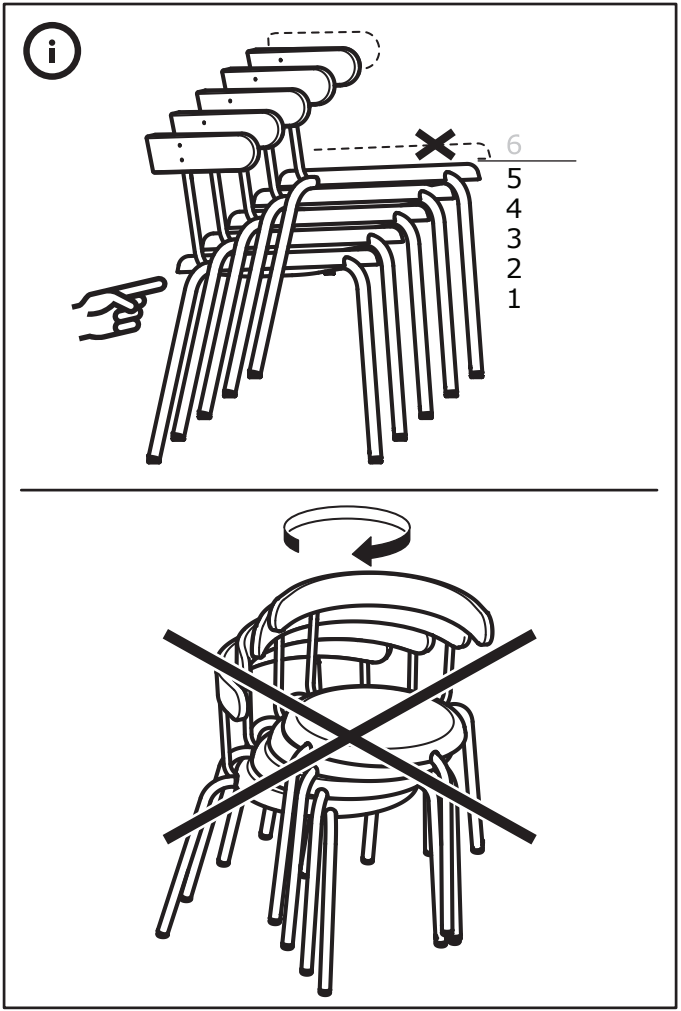

© Inter IKEA Systems B.V. 2019